Integrating EEG and MEG information to enhance motor-imagery classification in brain-computer interface

Marie-Constance Corsi, Mario Chavez, Denis Schwartz, Laurent Hugueville, Ankit Khambhati, Danielle S. Bassett, Fabrizio de Vico Fallani

Integrating EEG and MEG information to enhance motor-imagery classification in brain-computer interface

M.-C. Corsi[1,2], M. Chavez[2], D. Schwartz[3], L. Hugueville[3], A.N. Khambhati[4], D. S. Bassett[5], F. De Vico Fallani[1,2]

[1]INRIA, Aramis project-team, Institut du Cerveau et de la Moelle Epinière, ICM, Inserm U 1127, Sorbonne Université, F-75013, Paris, France
[2]CNRS UMR7225, Hôpital de la Pitié Salpêtrière, Paris, France
[3]Centre Neuroimagerie de Recherche - CENIR, Centre de Recherche de l'Institut du Cerveau et de la Moelle Epinière, Université Pierre et Marie Curie-Paris 6 UMR-S975, Inserm U975, CNRS UMR7225, Groupe Hospitalier Pitié-Salpêtrière, Paris, France
[4]Department of Bioengineering, University of Pennsylvania, Philadelphia, PA, 19104
[5]Departments of Bioengineering, Electrical and Systems Engineering , Physics, and Neurology, University of Pennsylvania, Philadelphia, PA, 19104

Brain-computer interface (BCI) is a potential tool for rehabilitation and communication that mainly relies on the electroencephalography (EEG). Despite its clinical applications, BCI faces to both engineering and user-oriented challenges to improve its spreading. In this work, we assess the possibility of integrating electroencephalographic (EEG) and magnetoencephalographic (MEG) signals to enhance the classification performance in motor imagery-based BCI.
By adopting a matching-score fusion approach (in an offline fashion) that optimizes the choice of the features in each individual, we reached an average classification improvement of 12.8 % as compared to separate EEG and MEG classifiers. These results could promote multimodal BCIs development.

Methods

BCI protocol

Fifteen healthy subjects (aged 28.13 ± 4.10 years, seven women) participated to the protocol

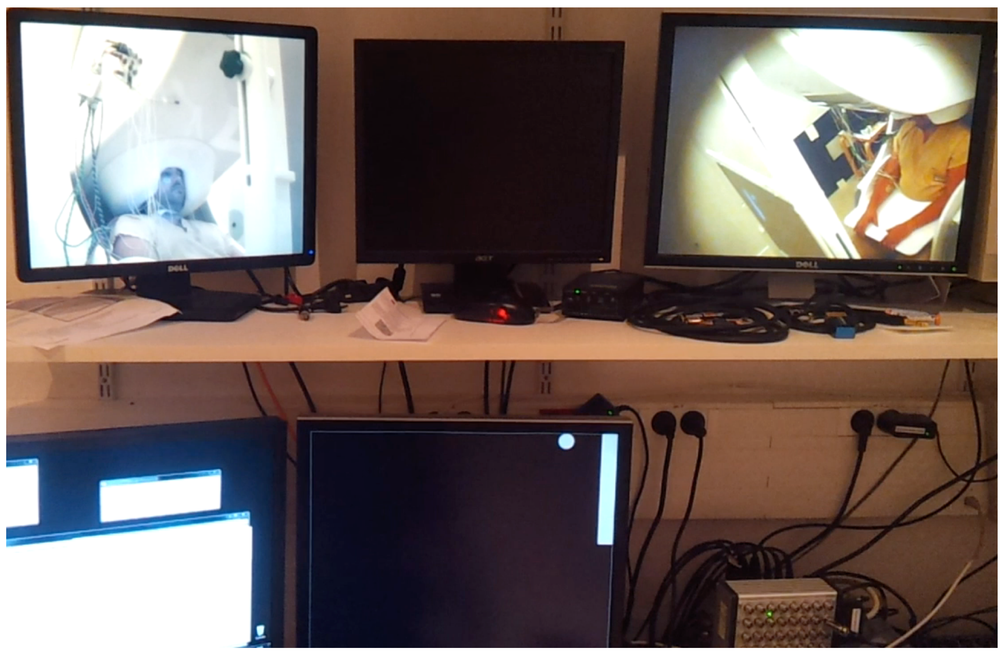

Fig. 1: BCI experiments performed at the CENIR. MEG and EEG are simultaneously recorded with, respectively: an Elekta Neuromag TRIUX machine® (204 planar gradiometers and 102 magnetometers) and a 74 EEG-channel system. The task consists in a 1D, 2-target, right-justified box task where the subject performs a sustained MI (grasping) of the right hand to hit up-targets, while remaining at rest to hit down-targets.

Fusion approach

No artifact removal method applied here to simulate online scenarios.

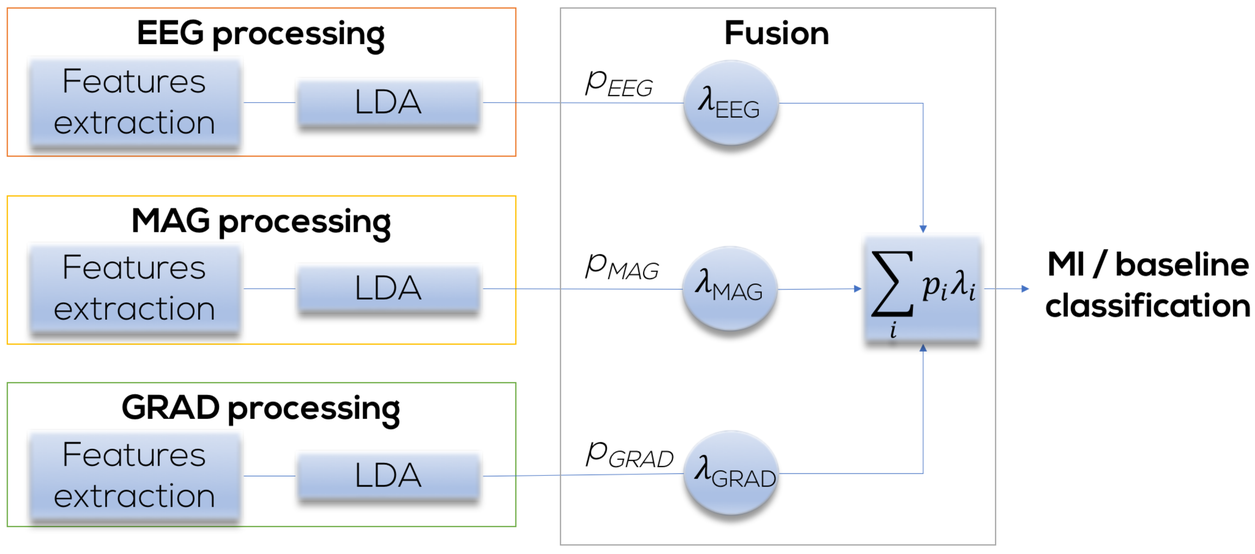

Fig. 2: Classifier fusion approach for a given frequency bin. The variables p_i and λ_i stand for the posterior probability and the weight parameter associated with the modality i,

Semi-automatic procedure to extract features:

- Focus on motor area contralateral to the imagined movement
- Nonparametric cluster-based permutation t-test between power spectra of MI and rest epochs
- Extraction of the N_f most discriminant features within the standard frequency bands

Results

Classification fusion enables a significant performance improvement

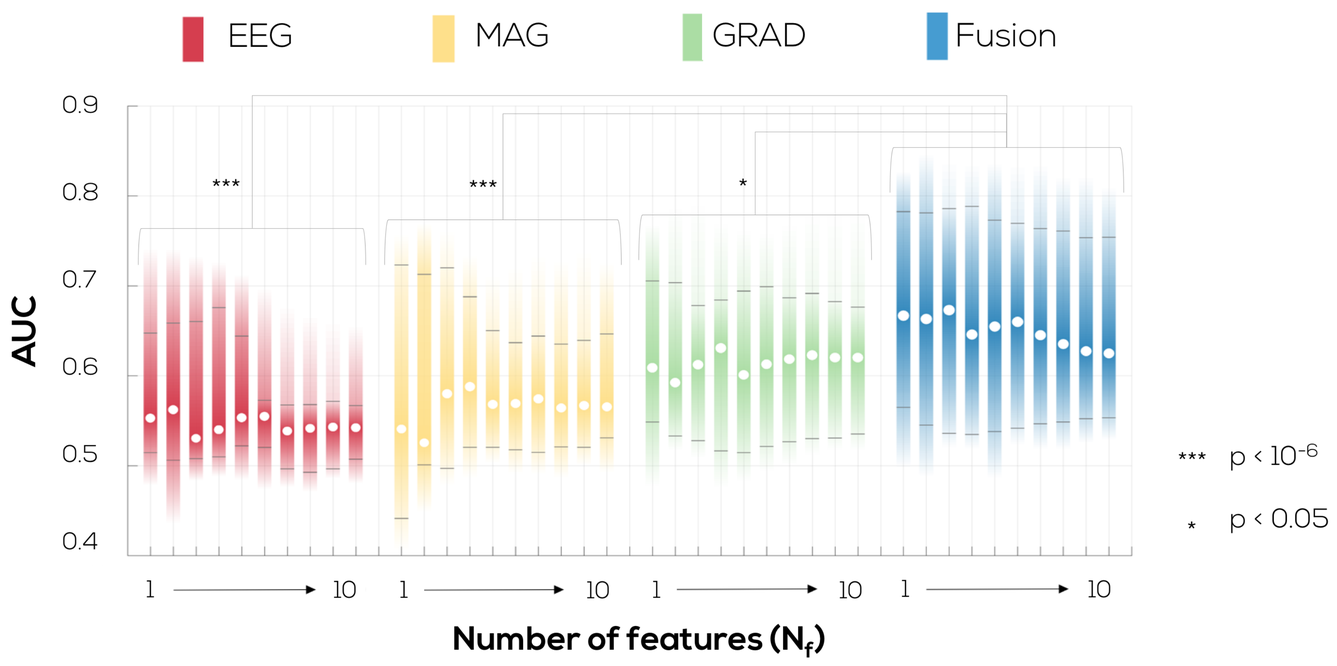

Fig. 3: AUC distributions across the 15 subjects, for all the modalities, and for different numbers of features within the alpha-band. White circles correspond to the the median values. In all frequency bands, the type of modality significantly affected the AUC values (ANOVA, $p < 10^{-3}$), whereas the number of features did not have a significant impact ($p > 0.05$).

Inter-subject variability: attributed weights

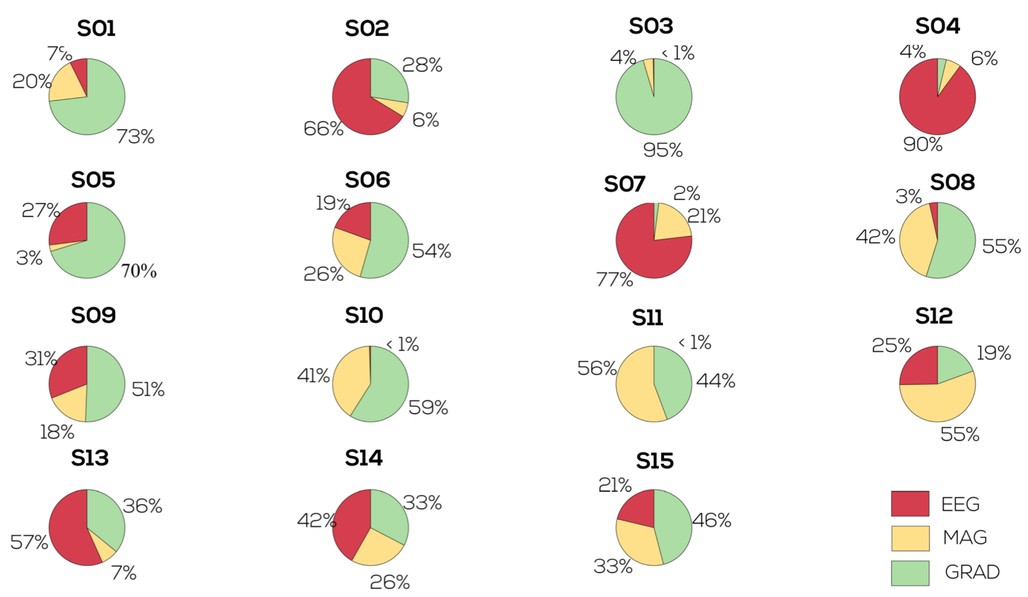

Fig. 4: Contribution of different modalities to the individual performance. Pie-diagrams show the i values (in percentage) obtained for each modality via the fusion approach.

marie.constance.corsi@gmail.com

Acknowledgments

This work was partially supported by French program "Investissements d'avenir" ANR-10-IAIHU-06; "ANRNIH CRCNS" ANR-15-NEUC-0006-02 and by Army Research Office (W911NF-14-1-0679).