HAL
open science

Output-Feedback Nonlinear Adaptive Control Strategy of Three-phase AC/DC Boost Power Converter for On-line UPS Systems

M Kissaoui, * A.A.R Al Tahir, Abdelmajid Abouloifa, Fatima Zara Chaoui, Y. Abouelmahjoub, Fouad Giri

To cite this version:

M Kissaoui, * A.A.R Al Tahir, Abdelmajid Abouloifa, Fatima Zara Chaoui, Y. Abouelmahjoub, et al.. Output-Feedback Nonlinear Adaptive Control Strategy of Three-phase AC/DC Boost Power Converter for On-line UPS Systems. 12'th IFAC International workshop on Adaptation and Learning in Control and Signal Processing,, University of Technology, Jun 2016, Eindhoven, Netherlands. pp.324 - 329., 10.1016/j.ifacol.2016.07.987 . hal-01367982

HAL Id: hal-01367982
https://hal.science/hal-01367982

Submitted on 18 Sep 2016

HAL is a multi-disciplinary open access archive for the deposit and dissemination of scientific research documents, whether they are published or not. The documents may come from teaching and research institutions in France or abroad, or from public or private research centers.

L'archive ouverte pluridisciplinaire **HAL**, est destinée au dépôt et à la diffusion de documents scientifiques de niveau recherche, publiés ou non, émanant des établissements d'enseignement et de recherche français ou étrangers, des laboratoires publics ou privés.

Preprints, 12th IFAC International Workshop on
Adaptation and Learning in Control and Signal Processing,
June 29 - July 1, 2016. Eindhoven, The Netherlands

Output-Feedback Nonlinear Adaptive Control Strategy of Three-phase AC/DC Boost Power Converter for On-line UPS Systems

M. Kissaoui [a,*], A.A.R. Al Tahir [b], A. Abouloifa [c], F.Z. Chaoui [a], Y. Abouelmahjoub [a], F. Giri [b]

[a] *University Mohammed V in Rabat, ENSET, RCSLNL/LMP2I, Morocco*
[b] *University of Caen Basse-Normandie, GREYC Lab UMR CNRS, 14032 Caen, France, ali.altahir@unicaen.fr*
[c] *University HASSAN II Casablanca, FSBM, LTI Lab, Morocco*
* *Corresponding Author: E-mail address: kissaouimed@gmail.com*

Abstract: In this paper, the problem of controlling three-phase boost power converter is considered for charging the battery in uninterruptible power supply (UPS) systems. The control objective is twofold: (i) ensuring a satisfactory power factor correction (PFC) at the grid-UPS connection; (ii) guaranteeing a tight regulation of the DC output voltage despite of load uncertain. The considered control problem entails several difficulties including: (i) the numerous state variables that are inaccessible to measurements; (ii) the uncertainty that prevails on some system parameters. The problem is dealt with using a cascade nonlinear adaptive controller that is developed making use of the Lyapunov control design technique. The inner-loop ensures the PFC objective and involves an adaptive observer estimating the grid phase currents, the magnitude of the parameters grid phase voltages and the load resistance. The estimation is only based on the online measurements of DC output voltage. The outer-loop regulates the DC output voltage up to small size ripples.

Keywords: AC/DC boost converter; Nonlinear control techniques; Adaptive observer; Power factor correction; UPS.

1. INTRODUCTION

With the advent of distributed DC power sources in the energy sector, boost-type three phase rectifiers are used increasingly in a wide diversity of applications: power supply for microelectronics, household-electric appliances, electronic ballast, DC-motor drives, power conversion, etc... (Mohan et al., 2002), especially, battery charger in UPS which are needed in several industrial fields, e.g. power systems involving critical loads such as computer systems, hospitals, and online secured transactions systems (Faiz & Shahgholian, 2006). The power factor correction and the DC output voltage regulation are of great importance in three-phase AC/DC converters, To meet these requirements various topologies had been proposed including single-phase and three-phase (Rodriguez et al., 2005). PWM rectifiers are widely used in three-phase AC-DC-AC double conversion UPS systems (Dai et al., 2005).

The problem of controlling three-phase AC/DC converter has been given a great deal of interest, over the last decade. Linear control methods using classical regulators for output voltage control have been proposed in (Pan & Chen, 1993), (Dixon & Ooi, 1988) where slow change of the modulation index is involved resulting in a slow dynamical response. Consequently, the linear feedback control of the rectifier output voltage becomes slow and difficult. Moreover, due to the coupling between the duty-cycle and the state variables in the AC/DC boost converter; linear controllers are not able to optimally perform over a wide range of operation conditions. In contrast to linear control, nonlinear approaches can optimize the dynamic performance of the AC/DC boost power converter over a wide range of operating conditions. There are many nonlinear control techniques that had been proposed, such as fuzzy logic control (Cecati et al., 2005), backstepping technique control (Allag et al., 2007), differential Flatness based control (Houari et al., 2012), and sliding mode control (Shtessel et al., 2008). However, most of the above mentioned works need continuous-time measurements of the ac-voltages, the ac-currents, and the dc-voltage. This requires a large number of both voltage and current measurement devices, which increases system complexity, cost and space that will reduce system availability and reliability of operation.

In this paper, the problem of controlling three-phase AC/DC boost power converter, operating in presence of uncertain loads, is will be addressed considering the topology presented in Fig.1. We seek a for control strategy meeting the two following control objectives simultaneously, which are:

(i) Achieving a perfect power factor correction as possible: the grid phase currents and its corresponding voltages must be as closely in phase as possible.

(ii) DC output voltage regulation: this voltage must be tightly regulated to a constant reference value with small size ripples less than $\pm 2\%$.

To achieve the above control objectives, a cascade nonlinear adaptive controller is designed using nonlinear control techniques. First, the inner-loop is designed to meet the PFC requirement. The inner controller includes a nonlinear current regulator and a nonlinear adaptive observer. The former is designed on the basis of the observed nonlinear model of the

Copyright © 2016 IFAC

grid-rectifier, using the Lyapunov control design technique. The nonlinear adaptive observer, which is an extended Kalman filter type inspired by (Besançon et al., 2006), provides online estimates of the grid phase currents, the magnitude of the unknown parameters grid voltages and load resistance. The outer-loop involves a filtered PI type regulator which regulates the DC output voltage.

This paper is organized as follows: In section 2, the mathematical model and control objectives are presented. The nonlinear adaptive controller design is dealt with in section 3, the controller performances are illustrated by simulation in section 4. Finally, some conclusions are drawn in section 5.

2. PROBLEM FORMULATION

2.1 System Topology and Modeling

The three-phase voltage source AC/DC full-bridge boost power converter under study has the structure shown in figure 1. It is assumed that an equivalent resistive load R_0 is connected to the output of the AC/DC boost power converter. The control inputs, as they appear on the system topology, are defined as $\mu = [\mu_1 \quad \mu_2 \quad \mu_3]^T$ which take values in the finite discrete set $\{-1, +1\}$, i.e. $\mu_1 = +1$; that corresponds to the conducting state for the upper switching element T_1 and non-conducting state for the lower switching element T_4 (Shtessel et al., 2008).

The dynamical model of the AC/DC boost power converter, in the rotating *(d, q)* frame (Liu et al., 2013), can be expressed as (actually $v_{gd} = 0$ and $v_{gq} = E$):

$$\frac{d\,i_d}{dt} = -\frac{r}{L} i_d + \omega i_q - \frac{v_0}{2L}\,\mu_d \tag{1a}$$

$$\frac{d\,i_q}{dt} = -\omega i_d - \frac{r}{L} i_q + \frac{E}{L} - \frac{v_0}{2L}\,\mu_q \tag{1b}$$

$$\frac{dv_0}{dt} = -\frac{v_0}{R_0 C_0} + \frac{3}{4\,C_0}\left(i_d\,\mu_d + i_q\,\mu_q\right) \tag{1c}$$

with, r , L stand for voltage source internal resistance and inductance and ω , C_0 are the angular frequency (rad /sec) of the voltage source and DC bus capacitance, respectively.

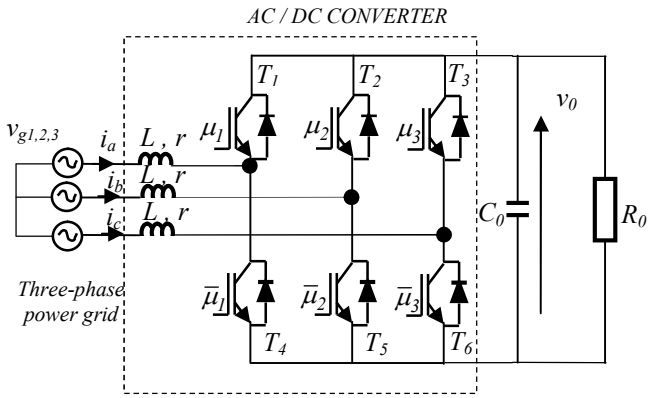

Fig .1. Electrical circuit of the three-phase AC/DC boost converter for on-line UPS system.

The model (1a-c) is useful for building up an accurate simulator of the three-phase AC/DC boost power converter. However, it cannot be based upon in the control design as it involves binary control inputs, namely μ_d and μ_q. This difficulty is generally coped with by resorting to average models where instantaneous signals are replaced by their averaged versions. Signal averaging is performed over cutting intervals (Abouloifa et al., 2004). With the notations of **Table 1**, the average model expresses as follows:

$$\frac{d\,x_d}{dt} = -\frac{r}{L} x_d + \omega\,x_q - \frac{x_0}{2L}\,u_d \tag{2a}$$

$$\frac{d\,x_q}{dt} = -\omega\,x_d - \frac{r}{L} x_q - \frac{x_0}{2L}\,u_q + \frac{1}{L}\theta_1 \tag{2b}$$

$$\frac{d\,x_0}{dt} = \frac{3}{4\,C_0}\left(x_d\,u_d + x_q\,u_q\right) - \frac{x_0}{C_0}\theta_2 \tag{2c}$$

It turns out that the average model (2a-c) is clearly nonlinear since the system model involves the product between its control inputs u_d, u_q and its state variables x_d, x_q, x_0 .

Table 1. State variables and unknown parameters

Variables and parameters	*Definition*	*Observation*
x_d	averaged i_d	inaccessible to measurements
x_q	averaged i_q	inaccessible to measurements
x_0	averaged v_0	accessible to measurements
θ_1	E	unknown parameter
θ_2	$1/R_0$	unknown parameter

2.2. Main Control Objectives

We seek for achievement of the following two objectives:

CO_1: PFC requirement: the input phase currents i_a, i_b, i_c should be in phase with corresponding input source voltage v_{g1}, v_{g2}, v_{g3} in order to obtain a unity power factor in the grid side.

CO_2: DC output voltage regulation: the DC component of the output voltage v_0 must be regulated to a desired reference voltage namely v_0^* while its AC component has to be attenuated to a given level for small size ripple.

As mentioned previously, one significant contribution of the present study resides in taking into account the following difficulties: (i) the load resistance R_0 is assumed to be constant but unknown; (ii) the magnitude of grid phase voltages E is also assumed bounded but unknown; and (iii) the grid phase currents are assumed inaccessible to measurements, unlike in previous works. Indeed, in most

previous works (e.g. Liu et al., 2013), only the load resistance is supposed to be unknown. This difficulty is presently coped with by augmenting the nonlinear controller based on an adaptive observer providing online estimates of the grid phase currents, the magnitude of grid phase voltages and load resistance based on the measurement of the DC output voltage. It turns out that, the number of required sensors is reduced this implies improving system availability and reliability of operation. The complete nonlinear adaptive control strategy is fully described in the next section.

3. ADAPTIVE CONTROLLER DESIGN

A nonlinear adaptive controller design shown in (Fig. 2) will be developed in two steps. The inner-loop is designed to ensure the PFC objective. The outer loop is built-up to achieve output voltage regulation of the three-phase AC/DC boost power converter.

3.1. Adaptive Observer Design

The model described by (2a-c) can be rewritten in the following compact form:

$$\begin{cases} \dot{X} = A\left(u_d, u_q\right)X + \Phi\left(y_0\right)\theta \\ y_0 = C\,X \end{cases} \tag{3}$$

with

$$X = \begin{bmatrix} x_d \\ x_q \\ x_0 \end{bmatrix}, \qquad A = \begin{bmatrix} -r/L & \omega & -u_d/2L \\ -\omega & -r/L & -u_q/2L \\ 3u_d/4C_0 & 3u_q/4C_0 & 0 \end{bmatrix},$$

$$C^T = \begin{bmatrix} 0 \\ 0 \\ 1 \end{bmatrix}, \qquad \Phi\left(y_0\right) = \begin{bmatrix} 0 & 0 \\ 1/L & 0 \\ 0 & -y_0/C_0 \end{bmatrix}, \qquad \theta = \begin{bmatrix} \theta_1 \\ \theta_2 \end{bmatrix}$$

Clearly, the system (3) is state-affine in the sense that all unknown quantities (i.e. x_d, x_q and θ) come in linearly. To get online estimates of the inaccessible states x_d, x_q and the unknown parameter vector θ, the following adaptive observer is proposed by (Besançon et al., 2006):

$$\dot{\hat{X}} = A\left(u_d, u_q\right)\hat{X} + \Phi\left(y_0\right)\hat{\theta} + \left\{\Lambda S_\theta^{-1}\Lambda^T C^T + S_X^{-1}C^T\right\}\left(y_0 - C\hat{X}\right) \tag{4a}$$

$$\dot{\hat{\theta}} = S_\theta^{-1}\Lambda^T C^T\left(y_0 - C\,\hat{X}\right) \tag{4b}$$

$$\dot{\Lambda} = \left\{A\left(u_d, u_q\right) - S_X^{-1}C^T C\right\}\Lambda + \Phi\left(y_0\right) \tag{4c}$$

$$\dot{S}_X = -\rho_X\, S_X - A\left(u_d, u_q\right)^T S_X - S_X\, A\left(u_d, u_q\right) + C^T C \tag{4d}$$

$$\dot{S}_\theta = -\rho_\theta\, S_\theta + \Lambda^T C^T C\,\Lambda \tag{4e}$$

where $S_X\left(0\right) > 0,\ S_\theta\left(0\right) > 0$ are any symmetric positive definite matrix; ρ_X and ρ_θ are any positive sufficiently large scalars. The matrix S_X is ensured bounded positive definite provided the following persistent excitation condition holds:

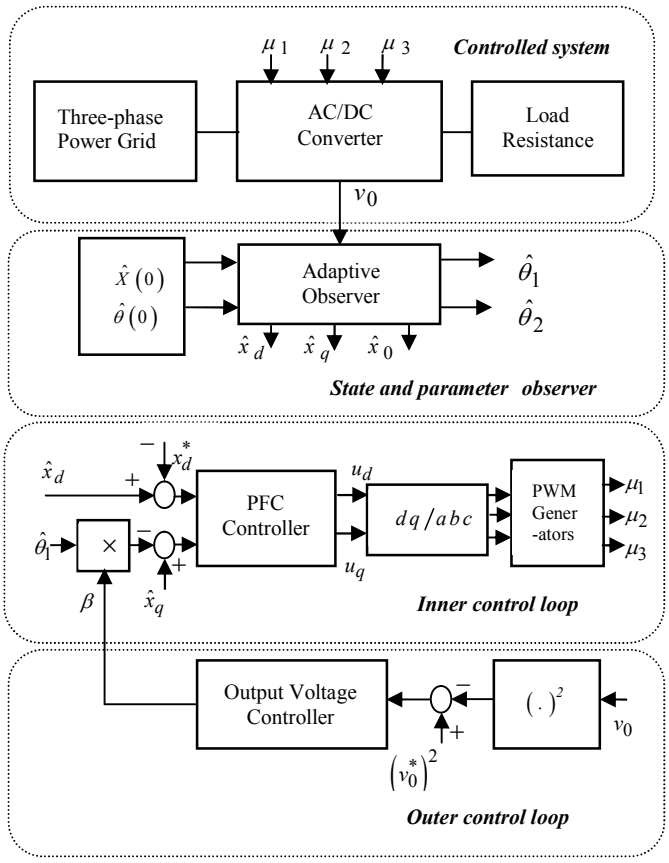

Fig. 2. Schematic diagram of output-feedback nonlinear adaptive controller

$$\alpha_1\, I \le \int_t^{t+T_1} \psi_{u_{dq}}\left(\tau\right)^T C^T C\,\psi_{u_{dq}}\left(\tau\right) d\tau \le \alpha_2\, I\ ,\ \forall t \ge t_0 \tag{5}$$

for some constants α_1, α_2, $T_1 > 0$. Where $\psi_{u_{dq}}$ denotes the state transition matrix in the system $\dot{X} = A\left(u_d, u_q\right)X$, $y_0 = C\,X$. The latter can be seen as a linear time-varying system parameterized by initial conditions as soon as the functions $u_d\left(t\right)$ and $u_q\left(t\right)$ are fixed. Owing to the matrix S_θ is ensured bounded positive definite provided by the following persistent excitation condition holds:

$$\alpha_3\, I \le \int_t^{t+T_2} \Lambda\left(\tau\right)^T C^T C\,\Lambda\left(\tau\right) d\tau \le \alpha_4\, I\ ,\ \forall t \ge t_0 \tag{6}$$

for some constants α_3, α_4, $T_2 > 0$.

The convergence properties of the above observer are analyzed based on the following error dynamic system:

$$\dot{\varepsilon}_x = \left(A\left(u_d, u_q\right) - S_X^{-1}C^T C\right)\varepsilon_x \tag{7a}$$

$$\dot{\tilde{\theta}} = -S_\theta^{-1}\Lambda^T C^T C\left(\varepsilon_x + \Lambda\tilde{\theta}\right) \tag{7b}$$

with $\varepsilon_x = \tilde{X} - \Lambda\tilde{\theta}$, $\quad \tilde{\theta} = \hat{\theta} - \theta$, $\quad \tilde{X} = \hat{X} - X$

To analyze the error dynamic system (7a-b), the following Lyapunov function candidate is considered:

$$V_{obs}\left(\varepsilon_x, \tilde{\theta}\right) = \varepsilon_x^T\, S_X\, \varepsilon_x + \tilde{\theta}^T\, S_\theta\, \tilde{\theta} \tag{8}$$

The stability results are summarized in the next proposition, the proof of which can be found in (Besançon et al., 2006).

Proposition 1. Under the condition (5) and (6), the error system (7a-b) is globally exponentially stable with respect to the Lyapunov function (8). Specifically, the following inequality holds:

$$\dot{V}_{obs}\left(\varepsilon_x,\tilde{\theta}\right) \le -\rho_{min} V_{obs}\left(\varepsilon_x,\tilde{\theta}\right) \tag{9}$$

with $\rho_{min} = min\left(\rho_X,\rho_\theta\right)$, whatever the initial conditions $\left(\varepsilon_x(0),\tilde{\theta}(0)\right)$.

It turns out that, the estimation errors ε_x and $\tilde{\theta}$ are exponentially converging to zero. Then, it turns $\tilde{X} = \varepsilon_x + \Lambda\tilde{\theta}$ also exponentially vanishes. The convergence rate depends on ρ_{min} and so it can be made as speedy as desirable by letting the observer gain ρ_X and ρ_θ sufficiently large.

Remark 1. The proof of Proposition 1 also requires that the state vector X is bounded. Presently, this is not an issue since the grid phase voltages are sinusoidal. Furthermore, the grid power is physically delimited. It turns out that the grid phase currents are also bounded. Note that u_1, u_2 and u_3 are also bounded since they take values between -1 and +1. Therefore u_d and u_q are also bounded with $\left|u_d\right|,\left|u_q\right| \le 1$.

3.2. Inner Control Loop Design-PFC achievement

The PFC requirement tracks to force the input phase currents x_d and x_q to match the reference signal $x_d^* = 0$ and $x_q^* = \beta\hat{\theta}_1$, with β is any positive real signal. In fact, the latter is allowed to (and actually will) be time-varying but it must converge to a constant value. That is, β stands for an additional control input.

Now, we will design PFC controller, using direct Lyapunov control design technique, for the system (3) based on the proposed adaptive observer (4a-e). The tracking error vector for the current control in (d-q) frame is defined as follows:

$$\left[z_{dq}\right] = \begin{bmatrix} \hat{x}_d - x_d^* \\ \hat{x}_q - x_q^* \end{bmatrix} \tag{10}$$

Using (4a) , it is readily shown that the tracking error vector z_{dq} undergoes the following dynamics:

$$\left[\dot{z}_{dq}\right] = \begin{bmatrix} -\frac{r}{L}\hat{x}_d + \omega\hat{x}_q - \frac{\hat{x}_0}{2L}u_d - m_1(t)\tilde{x}_0 \\ -\frac{r}{L}\hat{x}_q - \omega\hat{x}_d + \frac{1}{L}\hat{\theta}_1 - \frac{\hat{x}_0}{2L}u_q - m_2(t)\tilde{x}_0 - \dot{\beta}\hat{\theta}_1 - \beta\dot{\hat{\theta}}_1 \end{bmatrix} \tag{11}$$

From (4b) one gets: $\dot{\hat{\theta}}_1 = n_1(t)\,\tilde{x}_0$

where the quantities $m_1(t)$, $m_2(t)$, $m_3(t)$, $n_1(t)$ and $n_2(t)$ are defined as follows:

$$\left[M(t)\right] = \left[m_1(t) \quad m_2(t) \quad m_3(t)\right]^T \triangleq \left(\Lambda S_\theta^{-1}\Lambda^T C^T + S_X^{-1}C^T\right)$$

$$\left[N(t)\right] = \left[n_1(t) \quad n_2(t)\right]^T \triangleq -S_\theta^{-1}\Lambda^T C^T$$

Now, Equation (11) involves the average control inputs u_d and u_q must be determined so that the z_{dq} -system is made globally asymptotically stable. To do this, let us, consider the following Lyapunov function candidate:

$$V_{dq} = \frac{1}{2}\left[z_{dq}\right]^T\left[z_{dq}\right] \tag{12}$$

Its time-derivative is:

$$\dot{V}_{dq} = \frac{1}{2}\frac{d\left[z_{dq}\right]^T}{dt}\left[z_{dq}\right] + \frac{1}{2}\left[z_{dq}\right]^T\frac{d\left[z_{dq}\right]}{dt} \tag{13}$$

It is sufficient to choose the control inputs u_d and u_q so that the system dynamics in (14) holds:

$$\dot{V}_{dq} = -\left[z_{dq}\right]^T\left[c_{dq}\right]\left[z_{dq}\right] \tag{14}$$

where the design parameters quantity $\left[c_{dq}\right]$ is a symmetric positive definite matrix c_{dq} implies R^2 given by:

$$\left[c_{dq}\right] = \begin{bmatrix} c_d & 0 \\ 0 & c_q \end{bmatrix} \tag{15}$$

Using the closed loop dynamics in equation (14), this ensures that:

$$\left[\dot{z}_{dq}\right] = -\left[c_{dq}\right]\left[z_{dq}\right] \tag{16}$$

Comparing the tracking error dynamics (11) and (16), one has the following control laws u_d and u_q as:

$$u_d = \frac{2L}{\hat{x}_0}\left(c_d\, z_d - \frac{r}{L}\hat{x}_d + \omega\hat{x}_q - m_1(t)\tilde{x}_0\right) \tag{17a}$$

$$u_q = \frac{2L}{\hat{x}_0}\left(c_q\, z_q - \frac{r}{L}\hat{x}_q - \omega\hat{x}_d + \frac{1}{L}\hat{\theta}_1 - \dot{\beta}\hat{\theta}_1 - \left(\beta n_1(t) + m_2(t)\right)\tilde{x}_0\right) \tag{17b}$$

The above result is summarized in the following proposition.

Proposition 2. Consider the closed-loop control system, next called inner control loop, consisting of the system (3), the adaptive observer (4a-e) and the control laws (17a-b). Then, if the signal β and its first time-derivative are available, the inner control loop undergoes in the (d-q) frame z_{dq} - is :

$$\left[\dot{z}_{dq}\right] = -\left[c_{dq}\right]\left[z_{dq}\right] \tag{18}$$

3.3. Outer Control Loop Design - DC Output Voltage Regulation

The outer-control loop design is expected to generate the additional control signal β so that the output DC bus voltage x_0 is regulated to a given reference value x_0^* . To this end, the relation between β and the voltage x_0 shown in (Fig. 2) is established first one. This will be described in the following proposition.

Proposition 3. Consider the three-phase AC/DC boost power converter for UPS systems described by (2a-c) augmented by the adaptive observer (4a-e) and the inner control laws defined by (17a-b). Under the same assumptions as in Proposition 2, the DC squared-voltage $y=(y_0)^2=(x_0)^2$ varies, in response to the tuning ratio β, and according to the following first-order time-varying linear equation:

$$\dot{y}=-k\,y+f_1(\beta,\dot{\beta})+f_2(\beta,\dot{\beta},z_d,z_q,\tilde{x}_0) \tag{19}$$

with

$$k=2\frac{\hat{\theta}_2}{C_0},\quad f_1(\beta,\dot{\beta})=\frac{3L\,\beta\hat{\theta}_1}{C_0}\left(\frac{1}{L}\hat{\theta}_1-\frac{r}{L}\beta\hat{\theta}_1-\hat{\theta}_1\dot{\beta}\right)$$

$$f_2(\beta,\dot{\beta},z_d,z_q,\tilde{x}_0)=\frac{3L}{C_0}\left(c_d-\frac{r}{L}\right)z_d^{\,2}+\frac{3L}{C_0}\left(c_q-\frac{r}{L}\right)z_q^{\,2}$$
$$+\frac{3L}{C_0}\left((\omega-1)\hat{\theta}_1\beta-m_1(t)\tilde{x}_0\right)z_d-\frac{3L\beta\hat{\theta}_1}{C_0}\left(m_2(t)+\beta\,n_1(t)\right)\tilde{x}_0$$
$$+\frac{3L}{C_0}\left(\frac{1}{L}\hat{\theta}_1-\hat{\theta}_1\dot{\beta}+\left(c_q-\frac{2r}{L}\right)\beta\hat{\theta}_1-\left(m_2(t)\tilde{x}_0+\beta\,n_1(t)\right)\right)z_q$$
$$+\left(1+2m_3(t)\right)\tilde{x}_0^2$$

The additional control signal β stands for a control input in the first-order system (19). The problem at hand is to design of β a tuning law so that the DC squared voltage $y=(x_0)^2$ tracks a given reference signal $y^*=(x_0^*)^2$ where x_0^* is a desired reference signal greater than $2\hat{\theta}_1$, such that to ensure the occurrence elevation feature of the boost power converter. Bearing in your mind the fact that the tuning parameter, β and its first time derivative must be available as stated in (Proposition 2), the following first order filtered PI regulator is considered for harmonics reduction:

$$\beta=\frac{c_3}{c_3+s}(c_1\,z_1+c_2\,z_2) \tag{20a}$$

with $\quad z_1=y^*-y \quad , \quad z_2=\int_0^t z_1\,d\tau$

where s denotes the Laplace variable and (c_1,c_2,c_3) are any positive real constants. Knowing that (20a) implies that $\dot{\beta}$ can be computed using the following equation:

$$\dot{\beta}=c_3(c_1\,z_1+c_2\,z_2-\beta) \tag{20b}$$

4. NUMERICAL SIMULATION

The schematic diagram of nonlinear adaptive output feedback controller design described by Fig.2 is simulated using MATLAB/SIMPOWER toolbox (V.R2015a). The controlled part is a three phase AC/DC boost power converter supplying a load resistance R_0 with all the numerical values listed in **Table 2**. All involved electrical components are simulated using SIMPOWER toolbox which offers a quite accurate representation of power elements. Presently, the ODE1 (Euler) solver is selected with fixed step time of $10^{-6}\,s$. The simulation aims for illustrating the controller behavior in response to change of the parameter uncertainty in magnitude of grid phase voltage θ_1 from E_n to $0.8*E_n$ at time (0.2s) and return up to its nominal value at time (0.4s) while the load resistance is kept constant $(R_0=100\Omega)$. In addition to **Tables 2 and 3**, the simulation profile is described by Fig. 3 which shows the estimated $\hat{\theta}_1$ converges rapidly to its true value. The resulting robust controller performances are illustrated by Figs.4–7 for complete period of time is (0.6) s. The DC output voltage v_0 converges, in the mean, to its reference value with a good accuracy and the estimated signal $\hat{v}_0$ converges to its real value v_0 rapidly (Fig.4). Furthermore, it is observed that the voltage ripples oscillate at the frequency of 2ω, but their amplitudes are quite small compared with the average values of the true signals. Fig.5 shows the separate power factor value per phase and their product as a combined for nonlinear characteristic of the full bridge AC/DC boost power converter. The power factor correction requirement is well established with a distorsion factor less than 2%.

Table 2. Three phase AC/DC boost converter characteristics

Parameters	*Symbol*	*Values*
Three phase network	E_n	$220\sqrt{2}\,V$
	f/φ	$50Hz/\frac{2\pi}{3}rad$
AC/DC Converter	L	$1mH$
	r	0.4Ω
	C_0	$2\,mF$
load resistance	R_0	$100\,\Omega$

Table 3. Controller parameters

Parameters	*Symbol*	*Values*
PFC Regulateur	$c_d=c_q$	$1\times10^4\,s^{-1}$
DC Output Voltage Regulator	c_1	$6.75\times10^{-7}\,V^{-2}\Omega^{-1}$
	c_2	$3.3\times10^{-4}\,V^{-2}\Omega^{-1}s^{-1}$
	c_3	$6\times10^4\,s^{-1}$
adpative Observer	ρ_X	$5\times10^3\,s^{-1}$
	ρ_θ	$3\times10^2\,s^{-1}$

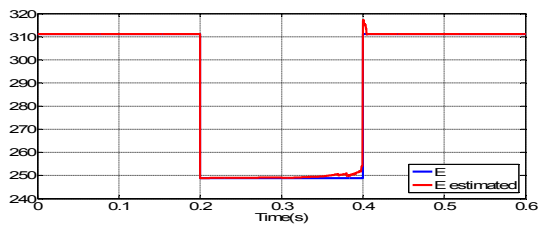

Fig .3. Magnitude grid voltage $\theta_1=E$ and its estimate (V)

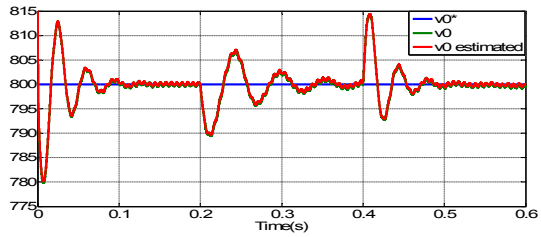

Fig .4. DC output voltage v_0 and its reference (V)

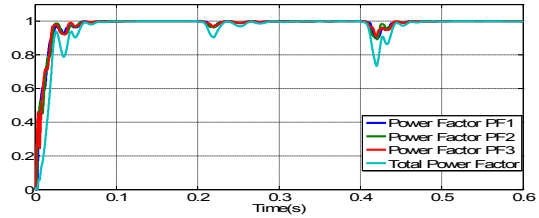

Fig .5. Power factor of the AC/DC converter

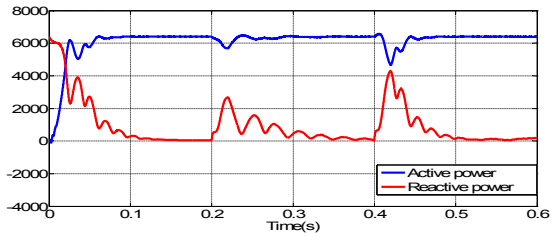

Fig .6. Output active power (P) in W and reactive power (Q) in VAR

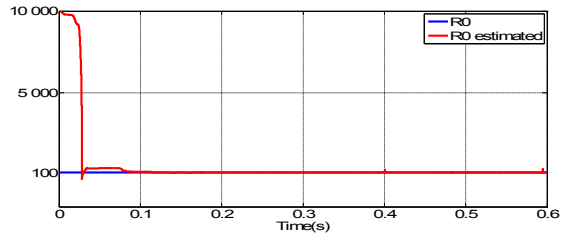

Fig .7. Unknown load $(\theta_2)^{-1} = R_0$ and its estimate $(\hat{\theta}_2)^{-1}$ (Ω)

Fig. 6 shows the dynamic performance for both active power (P) in W and zero convergence reactive power (Q) in VAR across the output of resistive load. To get better appreciate for the controller performances, it is observed in Fig.7 that the estimated load resistance $\hat{\theta}_2^{-1}$, provided by the adaptive observer (4a-e), converge exponentially to its true value after (0.1) s.

5. CONCLUSION

The problem of controlling three-phase AC/DC boost power converter as shown Fig.1 has been addressed successfully for charging the battery in UPS system under load and grid phase uncertainties and ensuring a good PFC. The control problem complexity lies in the non-linearity of the system dynamics and the uncertainty regarding with the magnitude of grid phase voltages and load resistance. The additional feature of the present contribution is that the grid currents are supposed to be inaccessible for measurements, the magnitude of grid phase voltages and the load resistance are assumed to be unknown. These requirements are realized using the adaptive output feedback control system composed of the adaptive observer (4a-e), the inner regulator (17a-b) and the outer regulator (20a). Specifically, it is shown that all control objectives are accomplished successfully, including PFC requirement and DC output voltage regulation.

REFERENCES

Dixon, J., and Ooi, B.T. (1988). Indirect Current Control of a Unity Power Factor Sinusoidal Current Boost Type Three-Phase Rectifier. *IEEE Transactions on Industrial Electronics*, 35, pp.508-515.

Pan, C., and Chen, T. (1993). Modelling and Analysis of a Three Phase PWM AC-DC Convertor without Current Sensor. *IEE Proceedings B, Electric Power Applications*, 140, pp. 201-208.

N. Mohan, T. Undeland, W. Robbins, (2002). Power Electronics: Converters Applications and Design. *Wiley Text Books*, Third Edition, ISBN: 0471226939.

Abouloifa, A., Giri, F., & Lachkar, I. (2004). Voltage regulation of AC-DC PWM rectifier using nonlinear control techniques. *Electromotion Journal-Cluj napoca*, pp.157-165.

Rodriguez, J., Dixon, J.W, Espinoza, J.R, Pontt, J., & Lezana, P. (2005). PWM Regenerative Rectifiers: State of the Art. *IEEE Transactions on Industrial Electronic,* Vol.52, pp.5-22.

Dai, M., Marwali, M., Jung, J.W., and Keyhani, A. (2005). A PWM Rectifier Control Technique for Three-Phase Double Conversion UPS under Unbalanced Load. *IEEE Applied Power Electronics Conference (APEC'05) Austin, Texas, USA.*

Cecati, C., Dell'Aquila, A., Lecci, A., and Liserre, M. (2005). Implementation Issues of a Fuzzy- Logic-Based Three-Phase Active Rectifier Employing Only Voltage Sensors. *IEEE Transactions on Industrial Electronics,* 52, pp.378-385.

Faiz, J., & Shahgholian, G. (2006). Uninterruptible power supply-A review. *ELECTOMOTION*, Vol.13, No.4, pp.276-289.

Besançon,G., De León-Morales, J., and Huerta-Guevara, O. (2006). On adaptive observers for state affine systems. *International Journal of Control*, 79:6, pp.581-591.

Allag, A., Hammoudi, M., Mimoune, S., Ayad, M., Becherif, M., and Miraoui, A. (2007). Tracking Control Via Adaptive Backstepping Approach for a Three Phase PWM AC-DC Converter. *In IEEE International Symposium on Industrial Electronics*, ISIE, pp. 371-376.

Shtessel, Y., Baev, S., and Biglari, H. (2008). Unity Power Factor Control in Three-Phase AC/DC Boost Converter Using Sliding Modes. *IEEE Transactions on Industrial Electronics,* 55, pp.3874-3882.

Houari, A., Renaudineau, H., Martin, J., Pierfederici, S., and Meibody-Tabar, F. (2012). Flatness-Based Control of Three-Phase Inverter with Output Filter. *IEEE Transactions on Industrial Electronics,* 59, pp. 2890-2897.

Liu, J., Laghrouche, S., and Wack, M. (2013). Observer-Based Higher Order Sliding Mode Control of Unity Power Factor in Three-Phase AC/DC Converter for Hybrid Electric Vehicle Applications. *International Journal of Control*, 1:11, pp.1-22.