HAL
open science

SHyPIE : a new source for on line production of multicharged radioactive condensable ion beams

N. Lecesne, J.C. Angélique, Bertram Blank, F. Clapier, M. Ducourtieux, P. Foury, G. Gaubert, Y. Huguet, S. Kandri-Rody, P. Jardin, et al.

To cite this version:

N. Lecesne, J.C. Angélique, Bertram Blank, F. Clapier, M. Ducourtieux, et al.. SHyPIE : a new source for on line production of multicharged radioactive condensable ion beams. 15th International Conference on Cyclotrons and their Applications, 1998, Caen, France. pp.362-365. in2p3-00005475

HAL Id: in2p3-00005475

https://hal.in2p3.fr/in2p3-00005475

Submitted on 29 Nov 2013

HAL is a multi-disciplinary open access archive for the deposit and dissemination of scientific research documents, whether they are published or not. The documents may come from teaching and research institutions in France or abroad, or from public or private research centers.

L'archive ouverte pluridisciplinaire **HAL**, est destinée au dépôt et à la diffusion de documents scientifiques de niveau recherche, publiés ou non, émanant des établissements d'enseignement et de recherche français ou étrangers, des laboratoires publics ou privés.

SHyPIE : A NEW SOURCE FOR ON LINE PRODUCTION OF MULTICHARGED RADIOACTIVE CONDENSABLE ION BEAMS

N. Lecesne[1], J.C. Angélique[2], B. Blank[3], F. Clapier[4], M. Ducourtieux[4], P. Foury[1], G. Gaubert[1], Y. Huguet[1], S. Kandri-Rody[4,*], P. Jardin[1], A. Lépine[5], R. Leroy[1], M. Lewitowicz[1], C. Marry[1], L. Maunoury[1], J. Obert[4], N.A. Orr[2], J.Y. Pacquet[1], N. Pauwels[4], J. Proust[4], J.C. Putaux[4], E. Robert[1], M.G. Saint-Laurent[1], D. Seron[1], P. Sortais[1], A.C.C. Villari[1]

1. GANIL, B.P. 5027, 14021 Caen Cedex, France
2. LPC-ISMRa, Bld. Marechal Juin, 14050 Caen, France
3. CENBG, B.P. 120, 33175 Gradignan Cedex, France
4. IPN, 91406, Orsay Cedex, France
5. IFUSP, C.P. 20516, 01498 São Paulo S.P., Brasil
** Permanent address: Université Chouaib Doukkali, Faculté des Sciences, 24000 El Jadida Morocco*

In order to define the future intensity and reliability of the on line radioactive beams for the SPIRAL project, an intense activity of research and development is being done around the target and the ion source problems. The main instrument for this purpose is the isotopic separator SIRa (Séparateur d'Ions Radioactifs) installed in the D2 experimental cave at GANIL. One of the research axis is the production of multicharged radioactive condensable ions. In this aim, we have built a new compact ECR ion source, SHyPIE (Source Hybride pour la Production d'Ions Exotiques), whose original magnetic configuration is under patent since 1997. This new magnetic structure allows to place an internal production target very close to the plasma, while avoiding radiation damages of the sensitive permanent magnets. A series of on line experiments have been done, using SHyPIE with several internal target systems, and around thirty species of condensable and noble gases radioactive multicharged ion beams have been produced. The behaviour of the plasma in a close geometry with the production target has been studied.

Introduction

The production of radioactive ion beams at GANIL in the SIRa separator [1] is based on the ISOL technique. The GANIL cyclotrons deliver heavy ion primary beams from carbon to uranium, with energies up to 95.A MeV and intensities up to 6 10^{12} particles/s for the lightest elements. The primary beam impinges on a thick target heated at 2300 K producing radioactive species by nuclear reactions. Some radioactive atoms release from the target and enter into an electron cyclotron resonance ion source where they are ionised and extracted.

1. Description of the internal target ion source system

In order to keep the distance between the target and the plasma zone as low as possible, the production target is placed inside the ion source. This mode is optimum for the production of condensable elements, which do not stick any more to the walls of a transfer tube, but reach directly the plasma of the ECRIS where they are ionised. As shown in the figure 1, the primary beam enters in the ion source through its extraction electrode, crosses the plasma zone and hits the production target placed in the injection side of the ECRIS. The low energy extracted radioactive ion beam is deviated by an electrostatic deflector to follow the direction of the SIRa separator. This particular configuration eliminates all the permanent magnets from 0 up to 90 degrees from the incident beam direction, avoiding the radiation damages caused by the high energetic neutron flux.

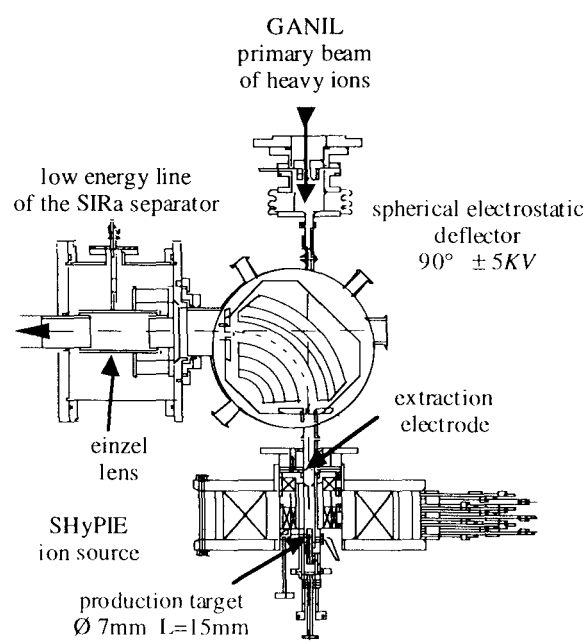

Figure 1: Internal target ion source system: SHyPIE (Source Hybride pour la Production d'Ions Exotiques)

2. Description of the ion source.

SHyPIE is a compact source dedicated to the production of gas and condensable radioactive multicharged ions [2]. Its magnetic field is produced by a new magnetic structure. The

axial field results from the superposition of a minimum field structure component and a constant field component, as shown in figure 2.

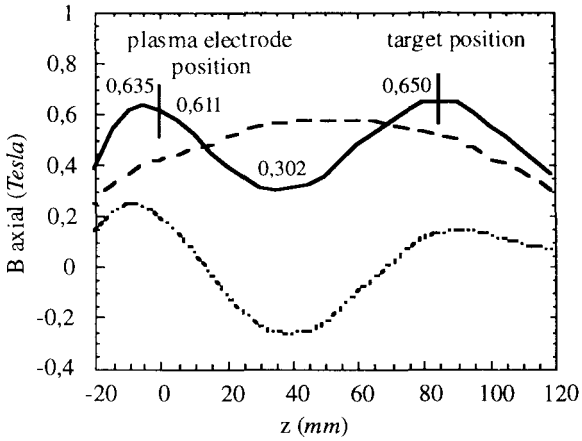

Figure 2: Axial magnetic field of SHyPIE. The dashed curve and the dotted curve reproduce, respectively, the coil contribution and the 2 permanent magnets rings contribution. The bold curve represents the resulting magnetic field.

The modulated field is produced by a system of 2 permanent FeNdB magnet rings. A coil produce the mean field which increase the modulated field up to the values compatible with an electron cyclotron resonance frequency of 10 GHz. With this set-up, the relative ratio Bmax/Bmin is 2.1. This new magnetic structure is under patent since 1997 [3]. The radial confinement is assured by an octupole. All the magnetic systems are concentric, mechanically independent and placed the ones inside the others (see Figure 3). This configuration avoid the presence of permanent magnets in the maximum field of the injection area and allows to place the production target and its resistive heating at 5 mm inside the radial confinement magnetic field.

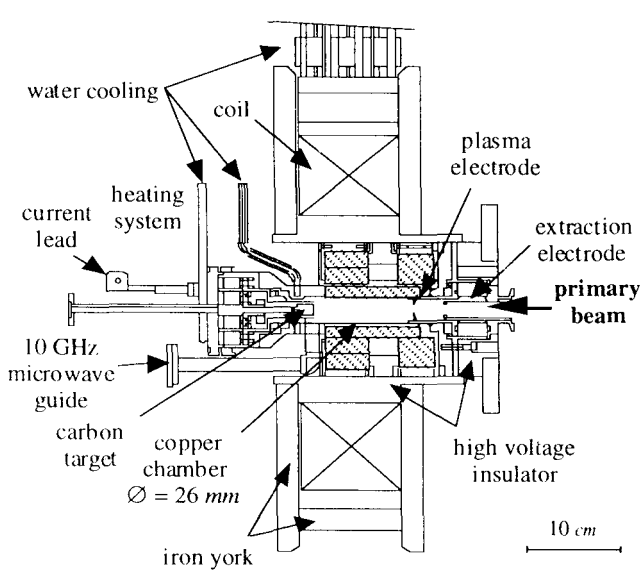

Figure 3: Schematic drawing of SHyPIE with its target-heating system. The hatching areas are the permanent magnets rings.

The 10 GHz electromagnetic wave is injected radialy, directly near the magnetic structure, through a rectangular wave guide welded to the 26 mm diameter copper chamber. The magnets, the chamber and the plasma electrode are setting at a high voltage between 12 and 20 kV. The target system can be biased to a negative value compared to the body source. The coil and the extraction system are to the ground.

3. The off line ion source performances

3.1. For noble gases

The ionisation efficiency of SHyPIE for Argon is similar to those of the classical ECR ion sources, it means an overall ionisation efficiency of around 100% with 10 to 20% in the most abundant charge state. The charge state distribution of ^{40}Ar, injected through a calibrated leak of 7 µAp, is shown in the figure 4.

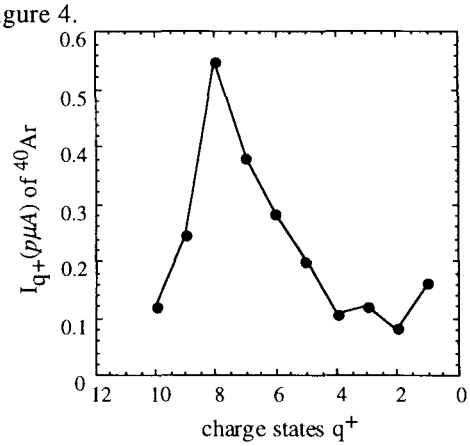

Figure 4: Charge state distribution of ^{40}Ar

However, due to the bad injection condition of the extracted beam in the electrostatic deflector, the transport efficiency in the SIRa separator is around 30%.

3.2. For condensable elements

The overall ionisation efficiency for chromium has been measured by evaporating a sample of ^{52}Cr with an oven at 1400 K placed inside the source. The oven with the chromium was weighted before and after around 30 hours of continuous running of the ion source in order to determine the evaporated weight. The ratio between the evaporated chromium quantity and the sum of the intensities of each chromium charge state during the experiment, corrected by the transport efficiency, gave an overall ionisation efficiency of 7.4%, with a low solid angle oven (the internal diameter of the oven was 2 mm). As the ionisation efficiency for the ^{40}Ar is around 100%, the transport efficiency is directly the ratio between the sum of the current of each charge state measured after the dipole of SIRa, and the 7 µAp injected through the calibrated leak. The chromium charge state distribution, shown in the figure 5, allows to estimate an absolute ionisation efficiency of 1.5% for the most abundant charge state.

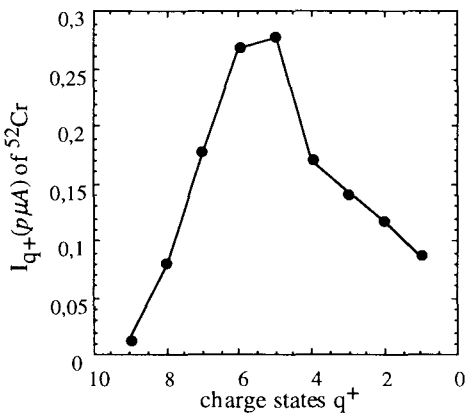

Figure 5: Charge state distribution of ^{52}Cr obtained with a low solid angle oven.

The same experiment has been performed with a large solid angle oven, shown in the figure 6. The external diameter of the oven was 16 mm and allowed to place the production target or a metallic sample inside a tungsten filament. A tantalum reflector surrounded the filament to increase the temperature up to 2100 K with 800 W of alternating ohmic power.

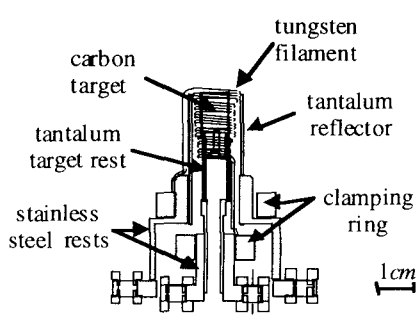

Figure 6: Large solid angle oven system with the production target.

An overall ionisation efficiency of 0.24% has been obtained with this system for the ^{52}Cr. This very low efficiency indicates that the chromium losses are much more important with the large solid angle oven than with the low one. It means that to have an efficient capture of the condensable elements by the plasma, the atoms have to be focalised forward when leaving the oven.

4. On-line performances

4.1. Description of the target systems

A series of radioactive ion production tests have been done in SIRa with SHyPIE and two different target systems. The first one was the large solid angle oven presented in figure 6, with a 9 mm diameter cylindrical target composed by a carbon heart of 7 mm diameter and a pyrolitic carbon container. The carbon of the target heart, furnished by Le Carbone Lorraine, had good diffusion properties, due to a grain size of 4 μm and an open porosity of 8%. This target has been irradiated by around 200 W of ^{40}Ca at 95.A MeV and by 400 W of ^{40}Ar at 70.A MeV. The beam power and the extra ohmic heating allowed to reach a target temperature of around 2100 K. The second target system was the previous carbon heart without container and oven, placed directly inside the ion source. This target was self-heated by 350 W of ^{36}S at 76.A MeV.

4.2 The on-line behaviour of SHyPIE

In order to study the behaviour of the plasma in a close geometry with a very high temperature element, the charge state distributions of ^{40}Ar, injected through the calibrated leak during the on-line tests, are compared in figure 7 for different experimental conditions.

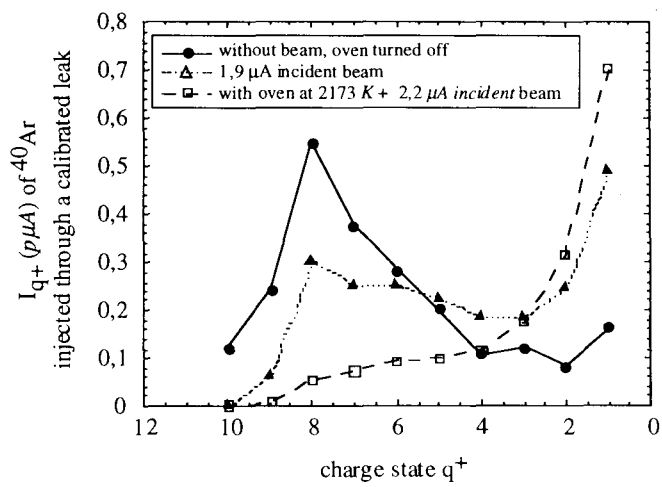

Figure 7 : Charge state distributions of ^{40}Ar injected through the calibrated leak, obtained with SHyPIE and the two different target systems.

It appears that the current of $^{40}Ar^{8+}$ is divided by a factor 2 and the low charge state currents increase when the self-heated carbon target is irradiated by 1.9 μA of incident beam. When the carbon target is heated by the oven and by 2.2 μA of incident beam, the charge state distribution is strongly shifted to the very low charge states and the overall quantity of ionised ^{40}Ar is divided by a factor 2.6. It seams that the electrons emitted by the high temperature carbon target and, in larger quantities, by the high temperature tungsten filament, disturb the plasma. In that case, the plasma potential and then the electrostatic confinement decrease, the high energy electrons are liberated and the high charge state ions are not more produced. This destructive effect could be inhibited by trapping the emitted electrons with, for example, a negative biased ring.

4.3. On-line results

The experiments performed with the carbon target irradiated by the ^{36}S incident beam allowed to produce around thirty gaseous and condensable radioactive multicharged ion beams.

exotic ion beam	primary beam	production rate (pps)
$^{35}Ar^{8+}$ (1.775 *s*)		not estimated
$^{39}Cl^{5+}$ (55.6 *mn*)		$4.5\ 10^4$
$^{38m}Cl^{3+}$ (715 *ms*)		$1.4\ 10^3$
$^{38}Cl^{3+}$ (37.29 *mn*)		$3.2\ 10^5$
$^{34m}Cl^{4+}$ (32 *mn*)		$3.2\ 10^5$
$^{37}S^{5+}$ (5.05 *mn*)		$8.8\ 10^4$
$^{35}S^{6+}$ (87.51 *j*)		$2.2\ 10^7$
$^{35}P^{4+}$ (47 *s*)		$4.3\ 10^2$
$^{30}P^{4+}$ (602 *ms*)		not estimated
$^{29}Al^{4+}$ (6.56 *mn*)		$2.9\ 10^4$
$^{28}Al^{3+}$ (2.24 *mn*)	$^{36}S^{16+}$	$1.9\ 10^4$
$^{29}Mg^{2+}$ (1.3 *mn*)	76.*A MeV*	$2.8\ 10^2$
$^{27}Mg^{3+}$ (9.46 *mn*)	350 *W*	$7.2\ 10^4$
$^{22}Mg^{3+}$ (3.86 *s*)	$7.8\ 10^{11}$ *pps*	$5.5\ 10^1$
$^{26}Na^{4+}$ (1.07 *s*)		$7.1\ 10^3$
$^{25}Na^{4+}$ (59.1 *j*)		$1.3\ 10^4$
$^{21}Na^{2+}$ (22.49 *s*)		$1.6\ 10^3$
$^{26}Ne^{4+}$ (197 *ms*)		$1.2\ 10^2$
$^{25}Ne^{4+}$ (602 *ms*)		$2.6\ 10^4$
$^{23}Ne^{3+}$ (37.24 *mn*)		$2.7\ 10^6$
$^{19}Ne^{2+}$ (17.34 *s*)		not estimated
$^{18}Ne^{2+}$ (1.67 *s*)		$1.5\ 10^5$
$^{22}F^{3+}$ (4.24 *s*)		$7.1\ 10^1$
$^{21}F^{2+}$ (4.16 s)		$7.3\ 10^2$
$^{20}F^{2+}$ (11 s)		not estimated
$^{22}O^{3+}$ (2.25 *s*)		$2.6\ 10^1$
$^{21}O^{2+}$ (3.42 *s*)		$5.4\ 10^2$
$^{20}O^{2+}$ (13.51 *s*)		not estimated
$^{14}N^{15}O^{1+}$ (2 *mn*)		not estimated
$^{25}Na^{1+}$ (59.1 *s*)	Ion source on	$1.6\ 10^4$
$^{25}Na^{1+}$ (59.1 *s*)	Ion source off	$5.4\ 10^6$

Table 1: Production rates of radioactive noble gases and condensable elements, obtained during the reaction $^{36}S+^{12}C$ at 78.A MeV with SHyPIE and the self-heated carbon target.

Their measured production yields are reported in table 1. It can be pointed out that beams of very reactive species like sulfur and phosphorus have been produced with multicharge states. It can also be noticed that a particular behaviour for the alkali elements has been observed. The production yield of $^{25}Na^{1+}$ is 350 times higher with the ion source turned off than with the ion source turned on. This effect is related to the weak ionisation energy, around 5 eV, of the sodium element which is already thermo-ionised when it leaves the high temperature carbon target. The positive plasma potential prevents these positive ions to enter in the plasma when the ion source is turned on.
These production rates could be increased by at least a factor 10 if the radioactive elements are focalised after their release from the target, according to the results of the measurements using the large and the low solid angle oven (see section 3.2).

Finally, as reasonable yields of several elements could be observed in these first tests, the method of coupling an internal target with an ECR ion source could give the best results for short living and very reactive condensable elements. More research and development are requested in order to improve this technique.

References

[1] R. Anne et al., Particle Accelerator Conference, Washington (USA), May 17-20 (1993).
[2] N. Lecesne, Ph.D. thesis Caen University, GANIL **T 97 08** (1997).
[3] J.Y. Pacquet, N. Lecesne, R. Leroy, P. Sortais and A.C.C. Villari, Brevet européen **96 07228** (1997).